94 JACKSON ROAD, SUITE 110, DEVENS, MA 01434

ADAPTORS

Model RMAD.IS.BNCff In Series – BNC female to BNC female

Frequency (GHz)	Impedance (Ω)	VSWR (max)	Insertion Loss (dB f=frequency GHz)
DC – 4	50	1.25:1	0.07 f ½

Notes:

a. **Material:**
   Body: brass/silver
   Socket Contacts: BeCu/gold
   Dielectric: teflon

b. **Operation temperature: -65C to +85C deg**

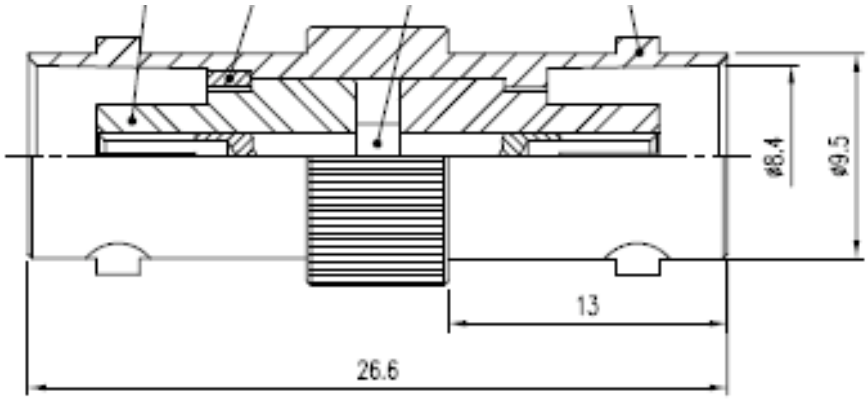

Dimensions in mm. All specifications subject to change

Telephone: 978-772-3767 **Fax: 978-772-3768**

www.responsemicrowave.com

Rev 10/10/12